21316552-06 - Downloaded from www.volvopenta.com 19/08/2015 12:28:04

Reference Number / Date	Location	Change description / Reason / Initials	P/A	Modified	Document release status
D-9643-18		SEE DCN	D 6 4	Modified NO	RELEASED
					Date 11-02-28

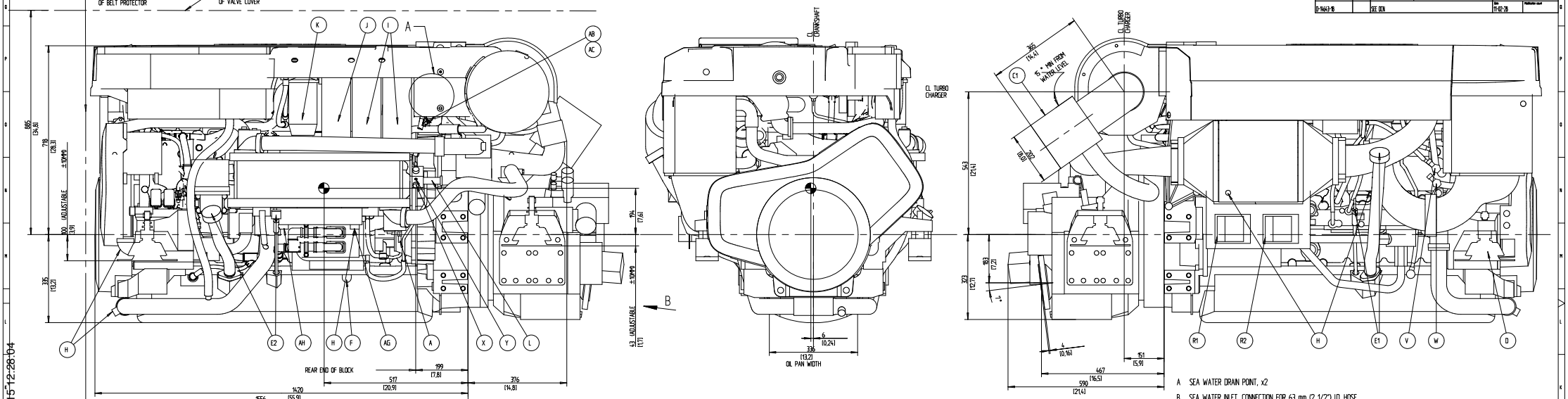

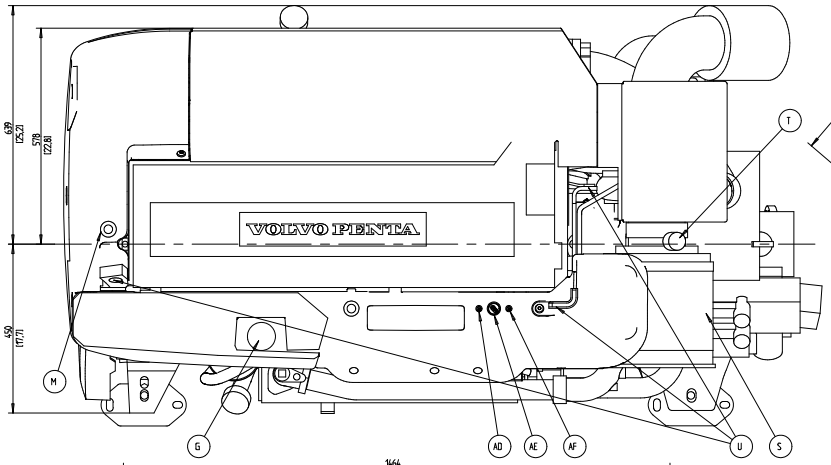

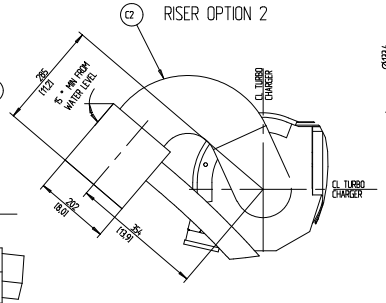

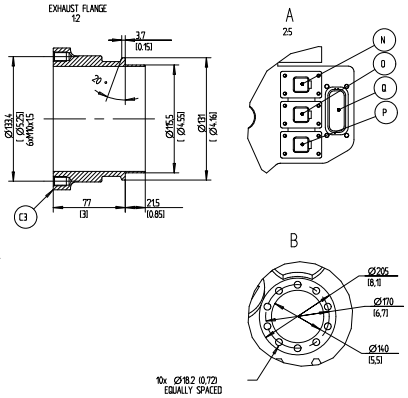

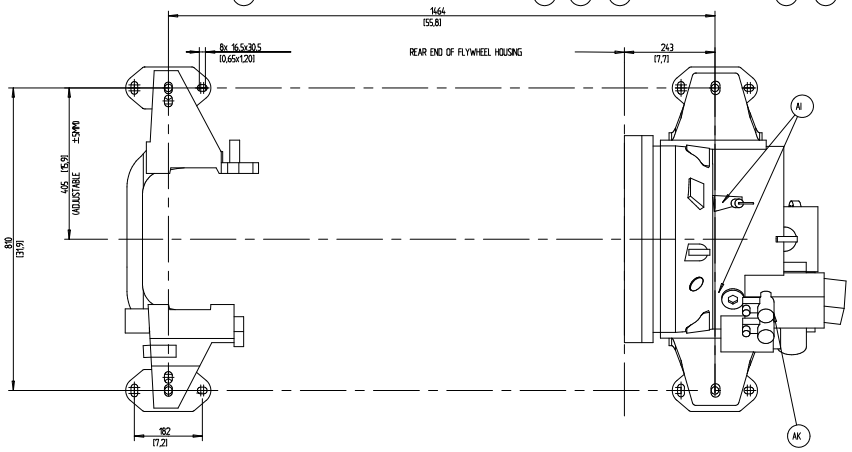

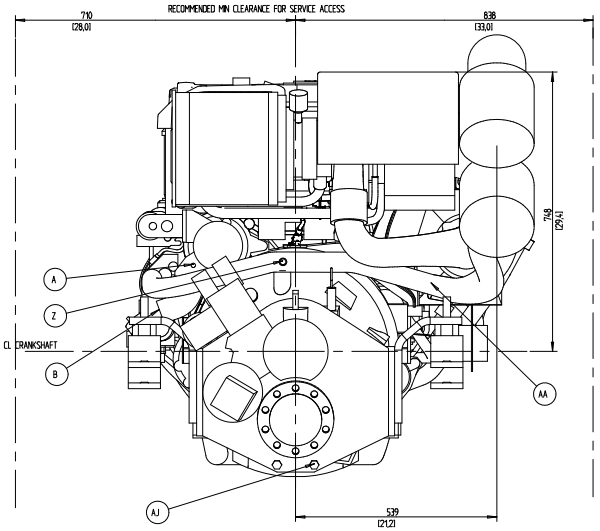

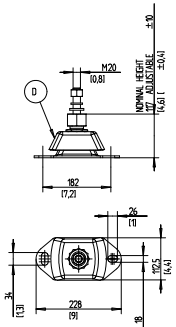

A SEA WATER DRAIN POINT, x2
B SEA WATER INLET, CONNECTION FOR 63 mm (2 1/2") I.D. HOSE
C1 WET EXHAUST BEND, OPTION 1
C2 WET EXHAUST BEND WITH RISER, OPTION 2
C3 EXHAUST FLANGE, OPTION 3, MAX LOAD 9KG
D FLEXIBLE SUSPENSION, STANDARD EQUIPMENT
E1 OIL DIPSTICK AND FILLING ENGINE STARBOARD SIDE ALTERNATIVE
E2 OIL DIPSTICK AND FILLING ENGINE PORT SIDE ALTERNATIVE
F OUTLET FOR OIL BILGE PUMP (M18x1.5)
G FRESH WATER FILLING (EXPANSION TANK)
H FRESH WATER DRAIN POINT (x5)
I OIL FILTER 2x
J BYPASS OIL FILTER
K FUEL FILTER/ WATER SEPARATOR
L PRIMER PUMP
M FUEL DEARATION
N DIAGNOSIS CONNECTION (6-POLE)
O CONNECTION SENDERS (6-POLE)
P DATALINK CONNECTION (6-POLE)
Q CONNECTION EVC (REVERSE GEARX32-POLE)
R1 CONNECTION BATTERY POS.
R2 CONNECTION BATTERY NEG.
S AIR FILTER
T PRESSURE DROP INDICATOR, AIR FILTER
U LIFTING EYE, 3x (Ø30 MIN. FRONT EYE REMOVABLE)
V HOSE CONNECTION HOT WATER OUTLET R1/2" I.D. HOSE, OPTIONAL EQUIPMENT
W HOSE CONNECTION HOT WATER INLET R1/2" I.D. HOSE, OPTIONAL EQUIPMENT
X FUEL CONNECTION INLET
Y FUEL CONNECTION OUTLET
Z PRESSURE LUBRICATION OF PROP SHAFT (1/4-18NPSF)
AA SEA WATER OUTLET FOR 2 1/8" I.D. HOSE (O.D. 54mm)
AB EXTERNAL STOP CONNECTION
AC CAN2 CONNECTION
AD AUTOMATIC FUSE, 10A (ENGINE)
AE STOP BUTTON
AF AUTOMATIC FUSE, 10A (EVC)
AG OIL INLET ON OIL COOLER (ISO-G 1/2)
AH OIL OUTLET ON OIL COOLER (ISO-G 1/2)
AI OIL DIPSTICK AND FILLING TRANSMISSION
AJ OIL DRAIN TRANSMISSION
AK EMERGENCY SHIFTING

SCALE 1:5
WET WEIGHT 1895KG (WITH OIL AND WATER)
DRY WEIGHT 1795KG (WITH OUT OIL AND WATER)
DIMENSIONS IN MILLIMETRE AND INCHES

SYMBOLS, DESIGNATIONS AND GENERAL DRAWING METHODS STD 97-0005

The copyright, distribution and utilization of this document as well as the communication of its contents to others without expressed authorization is prohibited. Offenders will be held liable for the payment of damages. All rights created by patent grant or registration of a utility model or design patent are reserved.

Document title: ENGINE DIMENSIONS D10B-A/H/G MP REVERSE GEAR ZF 335 AE

Description: DIMENSION DRAWING

VOLVO PENTA

Document No: 21316552 | Date code: 06 | Sheet No: 1 | Sheet qty: 1